اصنع في الإمارات
MAKE IT
IN THE EMIRATES

HUNTER STEEL FLANGES

Complete Mechanical & Engineering Solutions

About Us

HUNTER STEEL FLANGES MANUFACTURING is one of the most significant manufacturer of flanges & fitting materials according to ASTM, DIN, EN, and ISO standards used in critical applications, such as Oil & Gas, Chemical, Petroleum plants, Power plants, Shipyards and Offshore platforms. Our flanges and high specification forged products are made from a wide variety of materials, including, carbon steel, stainless steel, duplex-super duplex, Inconel, Titanium and other Special Alloys. HUNTER flanges and high specification forged products are designed and manufactured to withstand some of the world's harshest operational conditions, which they often need to endure in specialized market sectors such as oil & gas, petrochemicals, power generation and mineral refining.

HUNTER STEEL FLANGES MANUFACTURING is continuously seeking out new potential forging manufacturers to qualify to ensure flexibility and competitive offers to our customers. Our global reach, experience and expertise have been further extended through our extensive portfolio with demanding requirements and specifications. Special items are strategically important area of effort for HUNTER STEEL FLANGES MANUFACTURING.

Special items encompass a wide range of products and require a rare combination of competence, knowledge to manufacture to be able to serve and to build trust with the customers.

Through successful deliveries of challenging special item packages and repetitive orders from customers, HUNTER STEEL FLANGES MANUFACTURING has earned the reputation as a reliable and trustworthy partner in this field at very short time.

“Our Mission is to achieve excellence in customer satisfaction”

Vision

Our vision is to become the most trusted global market leader in providing consistent high-quality flanges & related product needs worldwide

Mission

Our Mission is to achieve excellence in customer satisfaction on every product we manufacture & supply.

Our Values

Hunter stands strong on the values of Courage, Discipline, Respect, Integrity, Loyalty, and Selfless Commitment — the core principles that drive our purpose and unite our people.

TOP QUALITY, TOP RELIABILITY & FAST SERVICE

Hunter Steel UAE is one of the leading manufacturers of flanges. Our flanges are made from a wide variety of materials, including carbon steel, low alloy steel, stainless steel and special alloys. Hunter Steel flanges are designed and manufactured to withstand some of the world's harshest conditions, which they often need to endure in specialized market sectors such as oil & gas, petrochemicals, power generations and mineral refining.

We are equipped with the most modern facilities and a highly qualified workforce, enabling us to offer the widest possible range of flanges. Our product line embodies the highest standards in quality, productivity and dependability. This, combined with our experience and tradition of excellence, has led to our unrivalled reputation for quality and service. Management systems based on the strictest quality standards allow HUNTER to develop the products and services that best satisfy our customer's needs of high-quality flanges and related products.

Management System
ISO 9001: 2015
ISO 45001: 2018
ISO 14001: 2015

ASTM/ASME
API
EN-DIN
NORSOK M-650

برنامج المحتوى الوطني

Make it in the Emirates

Hunter Steel Flanges proudly supports the **“Make it in the Emirates”** initiative by delivering high-quality, locally manufactured forged flanges and fittings. With advanced facilities in the UAE, we ensure faster delivery, reliable quality, and full compliance with global industrial standards—strengthening the nation’s industrial growth and supply chain resilience

“Locally made. Globally trusted”

Business Channels

PROJECT
- End Users
- EPC
- Contractors
- Traders

STOCK BUSINESS
- Stockists
- Distributors

.

Major Industry Of Product Application

- Oil And Gas
- Urea Plants
- Chemical And Petrochemical
- Aerospace
- Transmission
- Construction And Mining
- Power Generation
- Wind Power
- General Mechanics
- Water Treatment - Desalination

Hunter is an ICV-certified and ADNOC-approved manufacturer, delivering trusted quality and local value to the UAE’s energy sector.

ADNOC Approved Manufacture, with approval ID: 20022415

Our Certifications

Certificate

fahss فحص Since 1986

Management System as per
ISO 9001 : 2015

The Certification Body FAHSS hereby confirms as a result of the audit, and certification decision according to ISO/IEC 17021-1:2015, that the organization

Hunter Steel Flanges Manufacturing LLC
Plot # 49, Phase-1; Al Layan
Dubai Industrial City
Dubai, United Arab Emirates

operates a management system in accordance with the requirements of ISO 9001 : 2015 and will be assessed through periodic surveillance audits for conformity within the validity of the certificate

IAF Code: 17, 29

Design & Engineering, Manufacturing & Supply of Flanges, Flanged Branch Fittings, Branched Reinforced Connection Fittings (Olets), Spectacle Blinds and Other Fittings to Industries in Oil and Gas, Construction and Energy Sector

Certificate Registration No. EIAC 03 01053
Audit ID 1000 8088

Valid From **10-12-2025**
Valid Until 02-10-2028
Initial Certification 2019
Previous certificate validity 02-10-2025
Recertification audit date 08-11-2025

Certification Body
FAHSS

Abu Dhabi, 10-12-2025

FAHSS, Mezzanine Floor, Danat Tower A, Airport Road, P.O. Box 46030, Abu Dhabi, UAE **www.fahss.com**

IAF — eiac — ISO 9001 fahss فحص

011-CB-QMS

For certificate verification: www.iafcertsearch.org

Certificate

fahss فحص Since 1986

Management System as per
ISO 45001 : 2018

The Certification Body FAHSS hereby confirms as a result of the audit, and certification decision according to ISO/IEC 17021-1:2015, that the organization

Hunter Steel Flanges Manufacturing LLC
Plot # 49, Phase-1; Al Layan
Dubai Industrial City
Dubai, United Arab Emirates

operates a management system in accordance with the requirements of ISO 45001 : 2018 and will be assessed through periodic surveillance audits for conformity within the validity of the certificate

IAF Code: 17, 29

Design & Engineering, Manufacturing & Supply of Flanges, Flanged Branch Fittings, Branched Reinforced Connection Fittings (Olets), Spectacle Blinds and Other Fittings to Industries in Oil and Gas, Construction and Energy Sector

Certificate Registration No. EIAC 05 01053
Audit ID 1000 8088

Valid From 10-12-2025
Valid Until 02-10-2028
Initial Certification 2019 (BS OHSAS 18001)
Previous certificate validity 02-10-2025
Recertification audit date 08-11-2025

Certification Body
FAHSS

Abu Dhabi, 10-12-2025

FAHSS, Mezzanine Floor, Danat Tower A, Airport Road, P.O. Box 46030, Abu Dhabi, UAE www.fahss.com

IAF — eiac — ISO 45001 fahss فحص

011-CB-OHSMS

For certificate verification: www.iafcertsearch.org

Certificate

fahss فحص Since 1986

Management System as per
ISO 14001 : 2015

The Certification Body FAHSS hereby confirms as a result of the audit, and certification decision according to ISO/IEC 17021-1:2015, that the organization

Hunter Steel Flanges Manufacturing LLC
Plot # 49, Phase-1; Al Layan
Dubai Industrial City
Dubai, United Arab Emirates

operates a management system in accordance with the requirements of ISO 14001 : 2015 and will be assessed through periodic surveillance audits for conformity within the validity of the certificate

IAF Code: 17, 29

Design & Engineering, Manufacturing & Supply of Flanges, Flanged Branch Fittings, Branched Reinforced Connection Fittings (Olets), Spectacle Blinds and Other Fittings to Industries in Oil and Gas, Construction and Energy Sector

Certificate Registration No. EIAC 04 01053
Audit ID 1000 8088

Valid From **10-12-2025**
Valid Until 02-10-2028
Initial Certification 2019
Previous certificate validity 02-10-2025
Recertification audit date 08-11-2025

Certification Body
FAHSS

Abu Dhabi, 10-12-2025

FAHSS, Mezzanine Floor, Danat Tower A, Airport Road, P.O. Box 46030, Abu Dhabi, UAE **www.fahss.com**

IAF — eiac — ISO 14001 fahss فحص

011-CB-EMS

For certificate verification: www.iafcertsearch.org

PRODUCTION RANGE

International standards & customers drawing.

STANDARDS	ASME B16.5	ASME B16.47 SERIES A	DIN EN 1092-1	JIS B220	MSS SP-97	B. S. 3293*	ASME B16.47 SERIES B API Std 605*	ASME B16.36	SHELL SPEC	Other
TYPE OF PRODUCT	**NOMINAL PRESSURE**									
Welding Neck Flanges	150-2500	150-900	PN-2.5-400	5K -30K		150-900	75-900			**
Slip-on Flanges	150-2500		PN-2.5-63	5K -30K						**
Lap Joint Flanges	150-2500									**
Blind Flanges	150-2500	150-900	PN-2.5-63	5K -30K			75-900			**
Socket Welding Flanges	150-2500									**
Threaded Flanges	150-2500									**
Reducing Flanges	150-2500									**
Orifice Flanges								300-2500		**
Short Stub Ends										**
Long Welding Necks	150-2500									**
Anchor Flanges										**
Swivel Flanges										**
Spectacle Blind	150-2500	150-600					75-900		S380.11	**
Spade / Spacer	150-2500	150-600					75-900		S380.42 & S380.43	**
Restriction Orifice										**
Drip Ring / Bleed Ring										**
Reinforced Branch Connections - Weldolet, Sockolet, Threadolet - NipoFlange/ Weldo Flange - Latrolet, Nipolet					3000/ 6000					**
Custom Products										**

Size Over 60" available on request * for flanges from nominal size 26" & above.
** Flanges & special design on enquiry

Our Products

Size and Pressure Rating

- **SIZE:** • NPS ½” to 100”
- **CLASS** • 150 to 2500
- **API 6A** • 3000 to 15000
- **JIS** • 5K to 30K
- **DIN** • PN2.5 to PN 100

CARBON STEEL

STAINLESS STEEL

SUPER DUPLEX/ DUPLEX

SPECIAL ALLOY GRADES

CuNi GRADES

Design Standards

- ASME
- API
- SHELL
- MSS SP
- ISO
- CUSTOM DESIGN

Weld Neck Flange

Blind Flange

Threaded Flange

Reducing Flange

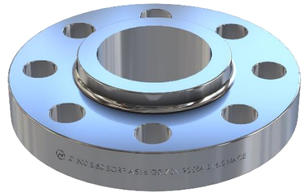

Slip On Flange

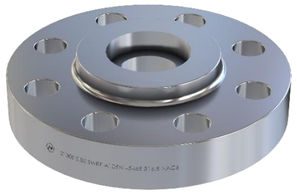

Socket Weld Flange

Anchor Flange

Drip/ Bleed Ring

Weldo Flange

Weldolet

Orifice Plate

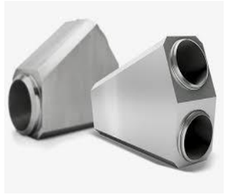

Special Tee

Material Grades

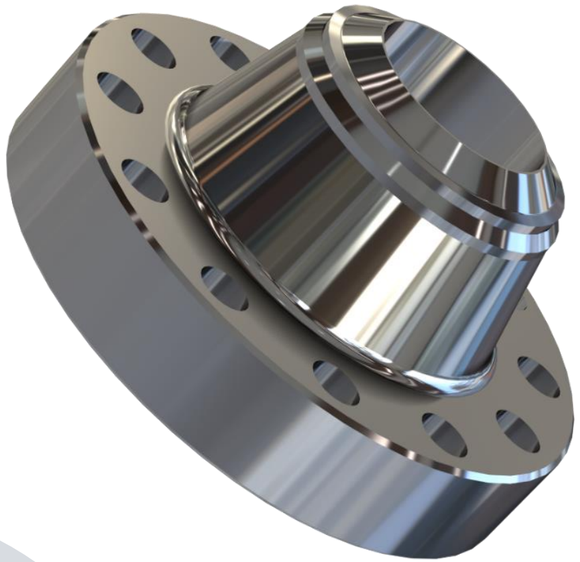

HEAT RESISTING STEEL	
ASTM/UNS	
C70600	Copper Alloy
N08020	Alloy 20
N06022 C22	Hastelloy
N04400	Monel 400
N06600	Alloy 600
N06625	Inconel 625
N08800	Alloy 800
N08810	Alloy 800H
N08811 H/T	Alloy 800
N08825	Inconel 825
N10276 C276	Hastelloy
N06059	Alloy 59
AUSTENITIC STAINLESS STEEL	
ASME/ ASTM	
A182 F304	
A182 F 304H	
A182 F304L	
A182 F310	
A182 F316	
A182 F316H	
A182 F316L	
A182 F316TI	
A182 F317L	
A182 F321	
A182 F321H	
A182 F347	
A182 F347H	
904L	

HIGH TEMPERATURE STEEL	
ASME/ASTM	
A105/N/C21	
A516 Gr-70	
A182 F1	
A182 F5	
A182 F9	
A182 F11	
A182 F12	
A182 F22	
A182 F91	
FINE GRAIN STRUCTURAL STEEL	
ASME/ASTM	
A350 LF2	
A694 F42	
A694 F46	
A694 F52	
A694 F56	
A694 F60	
A694 F65	
A694 F70	
DUPLEX / SUPER DUPLEX STEEL	
ASTM/UNS	
A182 F51/F60	S31803/ S32205
A182 F53	S32750
A182 F55	S32760
A182 F44/6Mo	S31254

Our Products

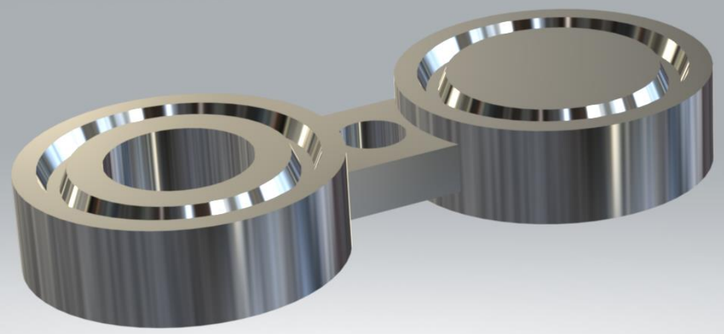

SPECTACLE BLIND : 1/2” to 60” up to CL2500

Figure 8 or Spectacle Blind, is made by a steel spade and spacer, united by a welded handle. Spectacle Blind may have a different type of joint face (RF Raised Face, FF Flat Face, RTJ Ring Joint), depending the type of flange.

The Spectacle Blind is usually used on the oil line with two different functions:

- If the spade is put in between the flanges, it stops the fluid’s passage;
- If the spacer is put in between the flanges, the passage of the fluid is allowed.

The Spectacle Blind is inserted between two flanges: in order to guarantee a perfect water tight two gaskets are normally mounted , one on each side of spectacle blind.

We can manufacture Spectacle Blind with different type of joint face (RF, FF, RTJ) in series 150/300/600/900/1500/2500 in according to major dimensional standards such as: B16.48, ARAMCO, SHELL, PETROBRAS, FOSTER WHEELER, API 590 and many others.

SPADE / SPACER : 1/2” to 60” up to CL2500

Spades (Paddle Blank) and Ring Spacers are basically the same as Spectacle Blinds, except that both are not attached to each other.
Spades and Spacers be applied in systems where maintenance is often not necessary, or in applications with large pipe sizes. Depending on the flange size and the Pressure Class, Spades can weigh hundreds of pounds. To prevent unnecessary weight to a flange connections, usually will be chosen not for a Spectacle Blind, but for 2 separate parts.

We can manufacture Spade/ Spacer with different type of joint face (RF, FF, RTJ) in series 150/300/600/900/1500/2500 in according to major dimensional standards such as: B16.48, ARAMCO, SHELL and many others

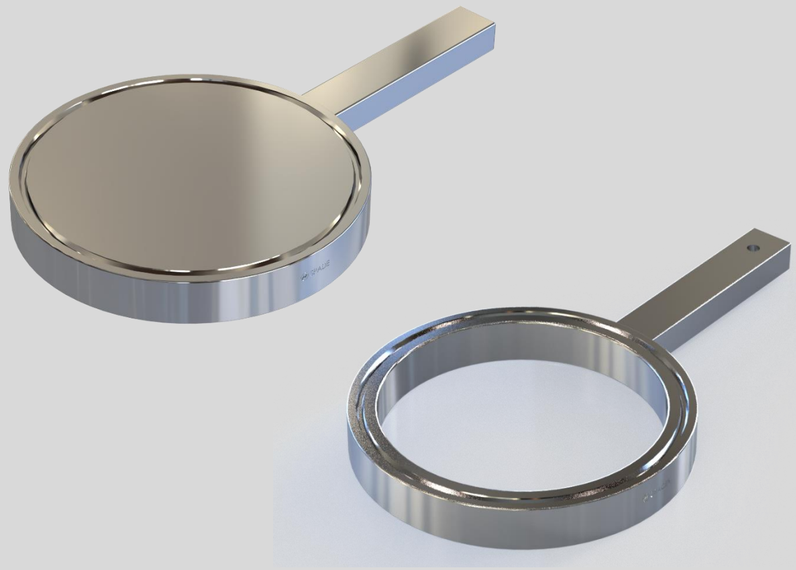

Our Products

ANCHOR / HANGER FLANGES

Anchor flanges are forged fittings installed on pipelines and embedded in reinforced concrete blocks. They are used to restrain or limit main line thermal expansion or contraction and transfer built-up stresses to external structures or larger foundation.

Anchor flanges can be installed in many different ways, such as suction and discharge laterals of pumping station at river crossing, points of directional change, connections to equipment at meter run and to secure subsea piping and risers to platform structure.

The flanges are supplied with end weld bevels to match the pipeline wall thickness. The most common materials for anchor flanges are SA 105 and high-yield stress such as SA 694, F52, F60, F65 and F70. Size range can cover up to 42”. Each anchor flange needs a specific design and calculation in according to ASME VIII Div.1 and to process datasheet supplied by the customer.

APPLICATIONS :
Hanger: risers & flow lines clamping to metallic structure (offshore).
Anchor: embedded in concrete – pipelines / PLR and others anchoring.
CHARACTERISTICS: Design code ASME VIII DIV 1 &2, ASME B31.3, ASME B31.4, ASME B31.8

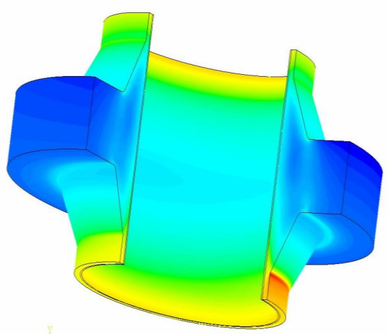

ORIFICE FLANGES

Orifice Flanges are used with orifice meters for the purpose of measuring the flow rate of either liquids or gases in the respective pipeline. Pairs of pressure "Tapping's", mostly on 2 sides, directly opposite each other, are machined into the orifice flange. This makes separate orifice carriers or tapping's in the pipe wall unnecessary.

Orifice Flanges generally come with either Raised Faces or RTJ (Ring Type Joint) facings. They are, for all intensive purposes, the same as weld neck and slip on flanges with extra machining.

Illustrated Orifice flange with orifice plate.

DRIP/ BLEED RING

Drip Rings, or Flushing Rings, are used in the oil or gas line. They are coupled between two seals.

The Drip Ring is circular, as a ring, with one or two holes. They may have one or two branches, based the usage that is made for. In the branch’s hole can be inserted instruments: pressure gauge, thermo-well or it can be free to allow the drainage of condensate. In correspondence to each hole the Drip Ring can be welded to a Weldo-flange or a branch connector.

We manufacture Drip Ring RJ and FF-RF (Class 150/300/600/900/1500/2500) with one-hole 3/4" NPT or two holes 1/2" NPT in according to standard and in according to special customer's requirements.

THERMOWELL FLANGES

Hunter Steel supplies robust and precisely engineered Thermowell Flanges designed to safeguard temperature sensors in demanding process environments. Our thermowell solutions ensure sensor protection and accurate measurement while withstanding extreme pressure, temperature, and flow-induced forces. We offer two reliable types: Integral Type and Threaded Compact Type.

- ✓ **Integral Type :** Flange and thermowell are forged and machined as a single solid unit for superior structural integrity.
- ✓ **Threaded Compact Type :** Thermowell body is threaded into a blind flange, offering a space-efficient and service-friendly design.
- ✓ **Durability:** Integral Type thermowell Ideal for high-pressure and high-vibration environments where long-term reliability is critical.
- ✓ **Applications**: Commonly used in oil & gas, refining, chemical, and power generation industries.
- ✓ **Compliance:** Manufactured in accordance with ASME B16.5 and Shell Std's
- ✓ **Options:** Available in various pressure ratings (150#–2500#), immersion lengths, bore sizes, and corrosion-resistant materials (e.g., SS316, Inconel, Hastelloy).

Orifice Plate - RTJ

Orifice Plate - RF

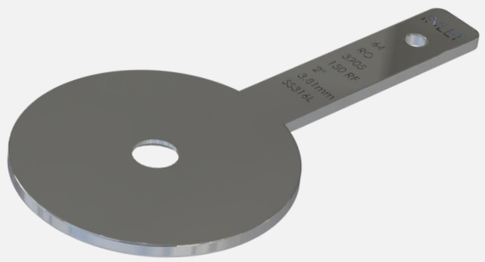

ORIFICE PLATES

Hunter Steel manufactures a full range of precision-engineered Orifice Plates for differential pressure-based flow measurement and flow restriction in piping systems. Designed to meet ASME B16.36 and ISO 5167 standards, our plates are available in Raised Face (RF), Ring Type Joint (RTJ) with Male/Female configurations, as well as Flow Orifice and Restriction Orifice variants.

Key Features:

- ✓ Available as Flow Orifice and Restriction Orifice based on application.
- ✓ Flange face types: RF, RTJ Male, RTJ Female.
- ✓ Custom bore design: Concentric, Eccentric, Segmental, or Single/Multi-stage restriction.
- ✓ Manufactured in materials like SS316, Duplex, Inconel, Monel, etc.
- ✓ Marked with bore size, flow direction, material grade, and tag number.
- ✓ Compatible with all standard flange ratings (150# to 2500#).
- ✓ Supplied with MTCs and optional third-party inspection.

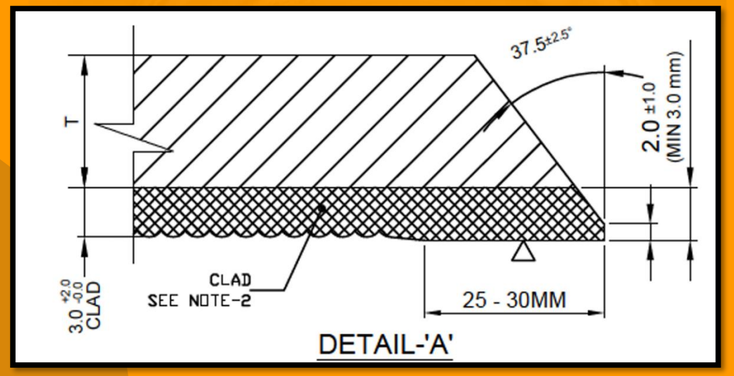

WELD OVERLAY / CLADDING

Products Offered: Flanges, Spectacle Blind, Spade / Spacer etc.

Overlay : Stainless Steel, Inconel, Cu- Ni etc.

Weld overlay is a welding process that provides protection against corrosion. During the process a specific metal is applied to a base to improve desirable properties.

Weld overlay is also known as cladding, hard facing, weld cladding or weld overlay cladding. Weld overlay is used for corrosion resistance or wear resistance and can be applied to extend the service life of new parts.
The Oil and Gas Industry is very familiar with the use of cladding to mitigate corrosion in pipelines, flanges and other components used in the extraction of hydrocarbons.

Weld clad components and pipes can be used as a cost-effective solution to corrosion prevention in any environments where highly corrosive agents are likely to occur, and where the environmental and commercial impact of system failure is un-acceptable.
The basic principle of cladding is to fuse a corrosion resistant alloy (CRA) to carbon steel, therefore increasing the asset lifespan, reducing downtime and maintenance costs. The demand for cladded products within the Oil and Gas sector continues to grow, with the specifications requiring extremely high quality and automated cladding technology playing a vital role in meeting the quality requirements.

O-let fittings

Hunter Steel Flanges offers a premium range of **O-let fittings** designed and manufactured in strict accordance with **MSS SP-97** standards. These fittings serve as integrally reinforced branch connections that ensure safe, efficient, and cost-effective solutions for high-pressure piping systems..

Key Features:

- ✓ Available in a variety of materials including carbon steel, stainless steel, and alloy steel
- ✓ Full compatibility with ASME B31.3 piping systems
- ✓ Sizes available from 1/2” to 24”
- ✓ Supports butt-weld, socket-weld, and threaded end connections
- ✓ Ideal for reducing stress concentrations at branch junctions

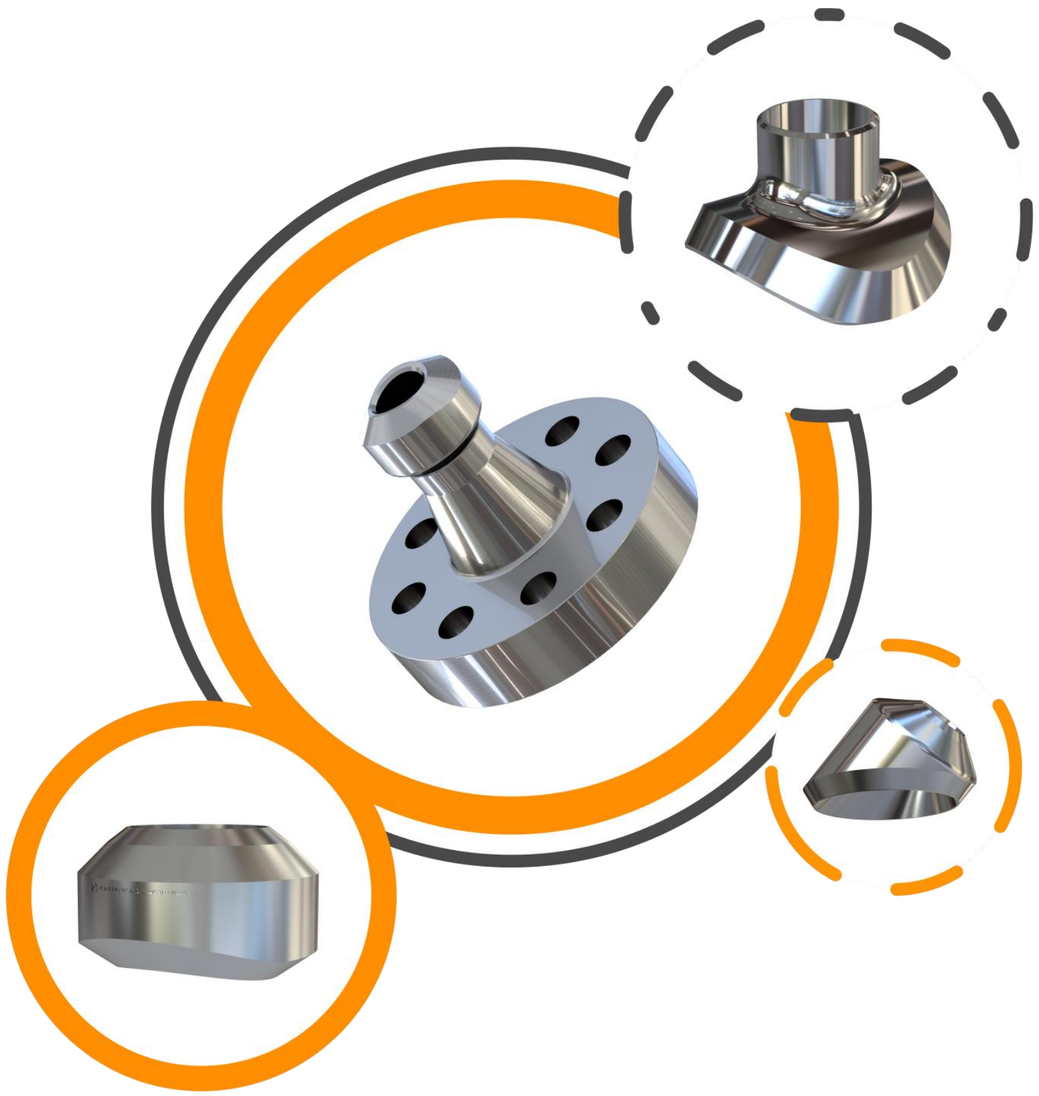

PIPE SLEEVES

Pipeline Reinforcing Sleeves are used to repair and reinforce pipelines damaged by internal and/or external corrosion, gouges, dents, cracks and defective welds. They're suitable for non-pressure retaining structural reinforcement, or for applications where the sleeve is required to contain the full design pressure of the pipeline. Pipeline Repair Sleeves can be welded on-line without the need for shutdown, thus keeping your critical assets operating for longer. They are designed to add extra reinforcement and strength to damaged sections of pipeline.

Key features:

- Available for pipe size up to ~ 72”
- Custom designed to customer specifications
- Available in a variety of carbon, stainless or alloy steel materials, depending on pipeline material and customer requirements
- Satisfy requirements of relevant standards for repairs designed to last as long as the host pipe
- Composite strength designed to match the stresses in the pipeline, delivering the most efficient and reliable repair
- Markers can be applied to ensure the repairs can be identified on future internal inspection by Intelligent Pigs
- Simple to install and backed up by extensive testing
- Proven to restore fatigue life of dented lines
- Proven to restore original strength of corroded lines
- Form a continuous repair with no gaps

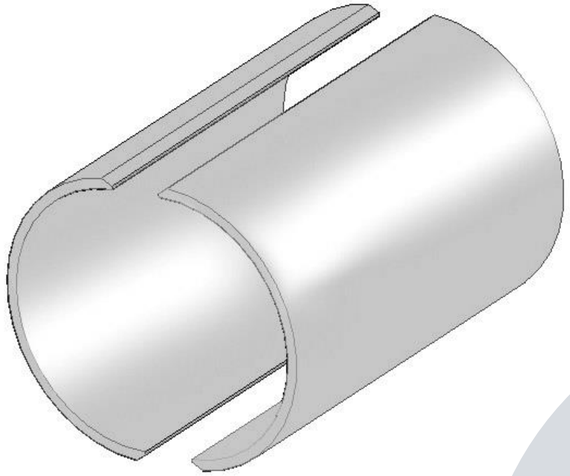

SPOOL FABRICATION

- Sizes: ½” to 36”
- STANDARD: API | ASTM | ASME | DIN | EN
- DESIGN: AS PER CLIENT
- GRADE: CARBON STEEL, LOW TEMP CARBON STEEL, STAINLESS STEEL, DUPLEX STAINLESS STEEL ALLOY STEEL, etc.

The prefabricated components of a piping system are called pipe spools. They include the pipes, flanges and fittings, and they are mounted during the fabrication before they are delivered to the construction area.

They are delivered pre-mounted so to make them easier to assemble using hoists, gauges, and other tools for assembly. Pipe spools connect long pipes with flanges at the tips so that they can be bolted to another pipe with matching flange.

PRODUCTION FACILITY

PRODUCTION CAPACITY: > 2000 MTON/YR MATERIAL CAPACITY, SIZE: Up to 2500MM DIAMETER LENGTH: 3000MM

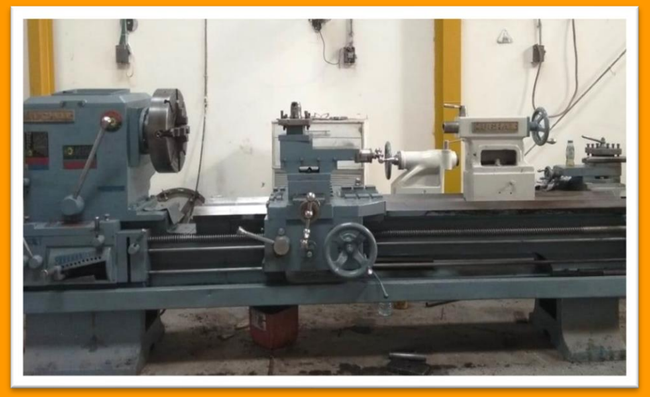

MAJOR END USERS SERVED THROUGH EPC COMPANIES

أدنوك
ADNOC

اينوك
enoc

تطوير للبترول
TATWEER PETROLEUM

بروج
Borouge

OQ

مؤسسة الإمارات للطاقة النووية
Emirates Nuclear Energy Corporation

KNPC

Enppi

EGA
الإمارات العالمية للألمنيوم
EMIRATES GLOBAL ALUMINIUM

Drydocks World

adani

PDO

SABK

قطر للغاز
QATARGAS

Hunter Steel Flanges Manufacturing LLC

+971 48877711

hsfm@huntersteel.ae

www.huntersteeluae.com